Published on *Business Energy Advisor* (https://tva.bizenergyadvisor.com)

Nonrefrigerative Cooling Systems

Though the vast majority of commercial buildings use vapor-compression cooling, several alternative, nonrefrigerative cooling technologies supply one-third of all commercial building floorspace—reducing energy use, peak demand, and chlorofluorocarbon use. There are many opportunities to achieve energy savings and increased occupant comfort through improved operations and maintenance (O&M) practices as well as retrofits for nonrefrigerative cooling systems. Use these procedures as you improve your O&M practices and install energy-saving retrofit equipment.

Operations

CONTROLS

Schedule equipment to shut off during unoccupied periods and when unnecessary.

There's no easier way to save energy than turning off equipment when it's not needed. Scheduling turns equipment on or off depending on time of day or day of the week. For example, scheduling can prevent needless operation of equipment after hours and on weekends, eliminating one of the largest energy wasters in commercial buildings. A feature called *optimum start*, offered by building automation system manufacturers, can further increase energy savings by automatically starting a system no earlier than necessary based on daily weather variations. Additionally, you can often turn off systems before all occupants leave the building because temperatures will not change quickly enough to affect occupant comfort.

Set up thermostats when lower cooling levels are acceptable.

Buildings with non-occupant–generated heating loads may require cooling 24 hours per day. When shutting off the cooling equipment is not an option, it may be possible to adjust the cooling setpoint a few degrees higher during unoccupied hours.

Use lockout strategies to avoid wasting energy.

Lockouts ensure that equipment doesn't come on unless necessary. Lockouts also protect

against glitches in control system programming that may inadvertently cause equipment to turn on. For example, outside air dampers can be locked at their minimum setting whenever the outside air rises above a certain temperature.

Review control sequences.

Ensure that control sequences and temperature setpoints for all equipment are set correctly. Also field-verify that sensors are in the correct location and are calibrated. Often when a temperature complaint is logged, the control strategy is tweaked to solve the problem even if it's not the root cause. And later, after the real cause has been found and fixed, no one may remember to go back and reprogram the control strategy. Over time, these tweaks can degrade system performance and efficiency. Fixing them is often cost-effective—for example, a recent report on building commissioning found that the average payback period for reviewing and modifying control strategies was only about seven months.

Use night precooling to save energy and reduce peak demand.

In many climates, although daytime temperatures exceed economizer high-temperature limits, temperatures at night are relatively cool. You can use nighttime air to precool the building for the next day by turning on the air handler and opening the economizer or outdoor air damper to flush the building, thus cooling down the building mass. The cool mass then acts as a heat sink the following day, absorbing heat from internal gains and reducing the amount of energy needed for cooling (**Figure 1**).

FIGURE 1: Regions with large diurnal temperature swings and lower humidity are best for night precooling.

Night ventilation (precooling) is most effective where nighttime temperatures are low and cooling loads are high.

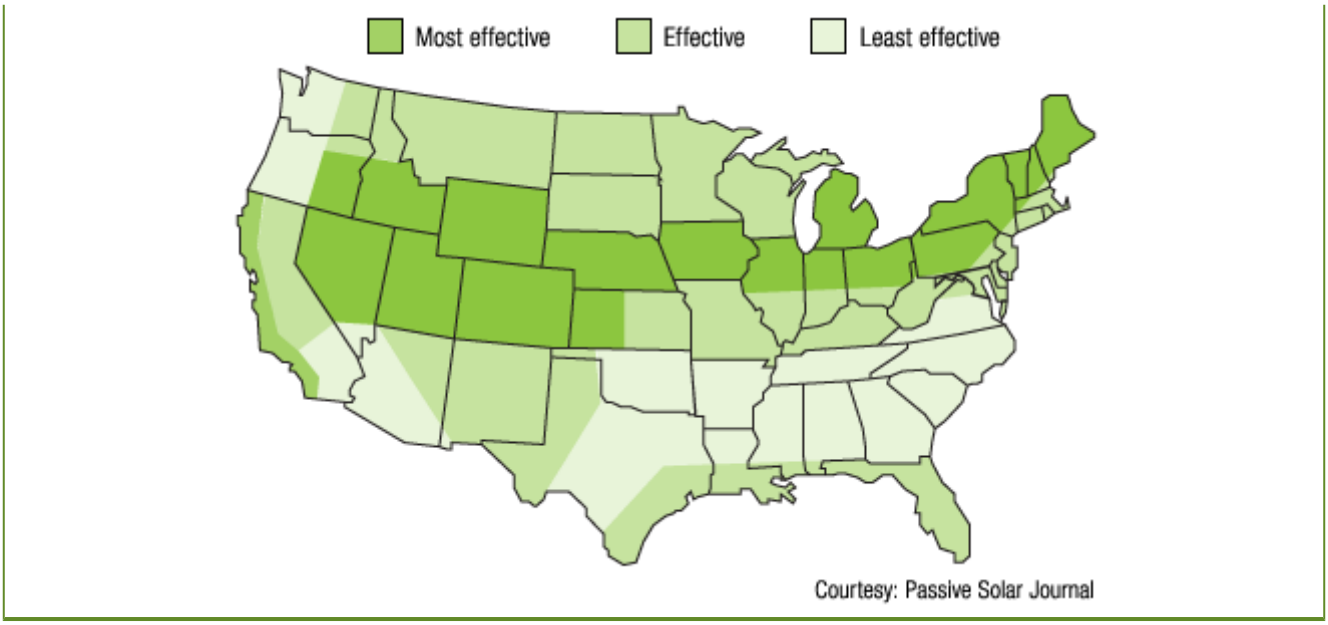

Setting controls for night precooling can save energy in dry climates with large diurnal temperature swings. According to studies of passive solar cooling strategies, cooling energy savings for a typical office building range from 5 percent in Phoenix, Arizona, to 18 percent in Denver, Colorado. Night precooling also reduces peak demand. Simulation analyses show that precooling an 80,000-square-foot, two-story retail building in Oakland, California, would reduce energy consumption by 13.2 percent of the total energy consumed for cooling as well as reduce cooling electrical demand by 13.9 percent.

Maintenance

AIR-SIDE ECONOMIZERS

Ensure proper economizer operation.

Air-side economizers are simple devices designed to save energy by drawing cool outside air into buildings. This process—often called *free cooling*—offsets much more expensive cooling provided by traditional vapor-compression equipment. An economizer consists of a collection of dampers, sensors, actuators, and logic devices on the supply-air side of the air-handling system, and it is capable of delivering up to 100 percent outside air. The outside-air damper is traditionally controlled so that when the outside temperature or enthalpy (a measure of the heat content of both the dry air and the moisture in it) is below a predefined setpoint, the outside-air damper opens, allowing air to be drawn into the building. On hot or humid days, the economizer damper closes to its minimum setting, which ideally is the minimum amount of fresh air required by the local building code (**Figure 2**).

FIGURE 2: Typical air-side economizer configuration

When the outside air temperature or enthalpy is lower than that of the return air, cooling coil operation can be reduced or eliminated. The primary controller sensor achieves better accuracy when placed in the building supply-air temperature stream instead of the mixed-air stream.

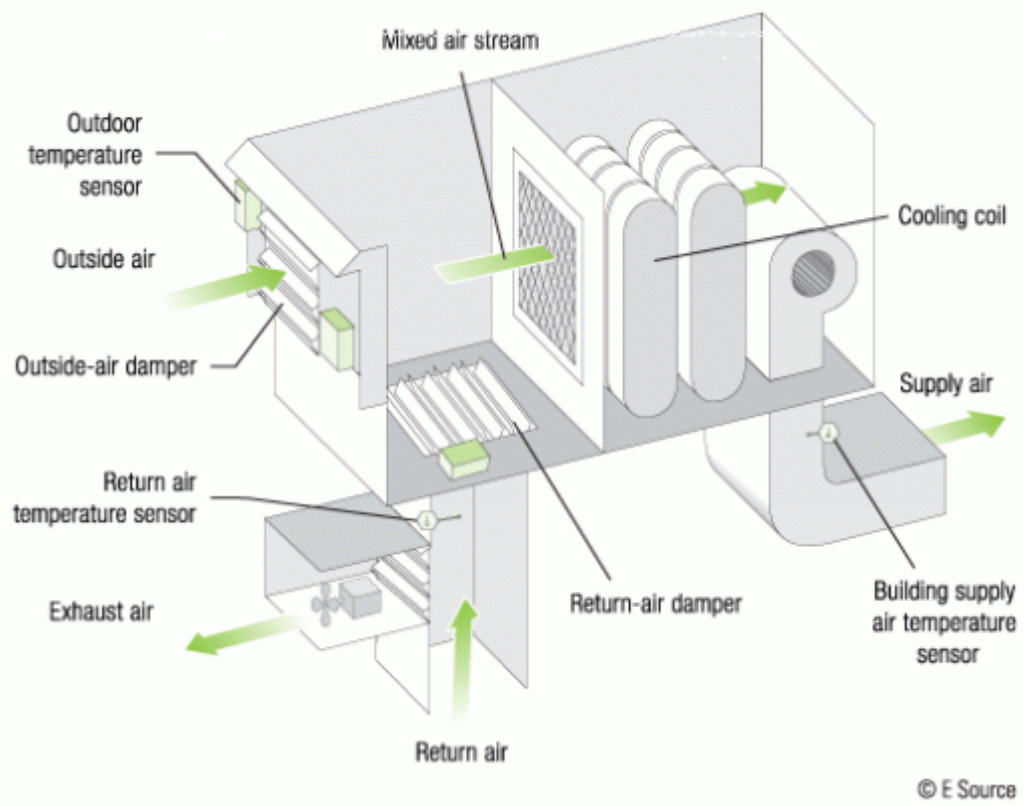

Economizer commissioning and maintenance are vital to proper operation and energy savings. A large number of newly installed economizers don't work properly, and problems increase as the equipment ages. The New Buildings Institute compiled the results of several field studies conducted between 2001 and 2004 in the report Review of Recent Commercial Roof Top Unit Field Studies in the Pacific Northwest and California (PDF). It found that out of 503 tested rooftop HVAC units, 64 percent had failed or maladjusted economizers.

Economizers fail for a variety of reasons—ranging from faulty mechanical components (such as stuck or broken linkages) to improper control settings. To make matters worse, malfunctioning economizers often waste much more energy than they were intended to save. If an economizer breaks down when its damper is wide open, peak loads can shoot up as cooling or heating systems try to compensate for the excess air entering the building. An E Source computer simulation of an office building in Phoenix, Arizona, showed that a damper permanently stuck in the wide-open position could add as much as 80 percent to that

building's summer peak load—assuming the building had enough cooling capacity to meet the higher load. Using robust controls and a regular maintenance program can help ensure that economizers function as intended.

Adhere to an annual maintenance program that includes functional testing—critical for identifying failed actuators, faulty linkages, and stuck dampers. In functional testing, manually step the equipment through each economizer control sequence and rely on visual inspection to verify that all mechanical components are operating properly in response to control sequence commands. This process also verifies that the temperature sensors are within specification and that the correct setpoints are selected. Portland Energy Conservation Inc. and Pacific Gas and Electric provide free economizer checklists for functional testing.

As an alternative to functional testing, or if functional testing proves inconclusive, diagnosticians can also install portable dataloggers that measure and log temperature readings. This method can help identify malfunctions or better understand suspected problems, as described in Assessing Economizer Performance (PDF). Typically, dataloggers are installed in the outside-, return-, supply-, and mixed-air streams for two weeks. The collected temperature data may then be downloaded and examined using simple spreadsheet software.

Facilities with an existing building automation system (BAS) can also monitor and diagnose economizer performance on an ongoing basis to further ensure reliability and savings. This technique allows you to identify and repair malfunctions before they waste much energy. For example, installing an end switch at the outside air damper minimum position allows the BAS to verify that the dampers are at the minimum position during lockout and generates an alarm if they're not.

DIRECT EVAPORATIVE COOLERS

Complete a system tune-up for water and air distribution.

Direct evaporative coolers (DECs) use a supply fan to blow hot, relatively dry outside air across a wetted media and cool the air by evaporating some of the water—reducing the air's drybulb temperature while increasing its humidity. Poor maintenance of these systems can lead to problems with odors and microbial growth that can create unhealthy conditions and tarnish the reputation of evaporative cooling technologies. For example, while several school districts around the country were installing evaporative coolers, at least one school district in Colorado had to replace all of its evaporative coolers with vapor-compression air conditioning due to negative perceptions generated by poor maintenance, according to the district's facility

management staff. Parents of children in the district insisted on removing the evaporative system after it was implicated in musty smells and high incidence of illness in the schools. Performing a system tune-up on both the air and water side will help ensure that the evaporative cooler is both performing at its peak efficiency and delivering high-quality air to the space (**Figure 3**).

FIGURE 3: Simple in both design and operation, direct evaporative coolers improve indoor air quality and save energy

Direct evaporative coolers bring in 100 percent outside air to deliver fresh, moistened air to building spaces.

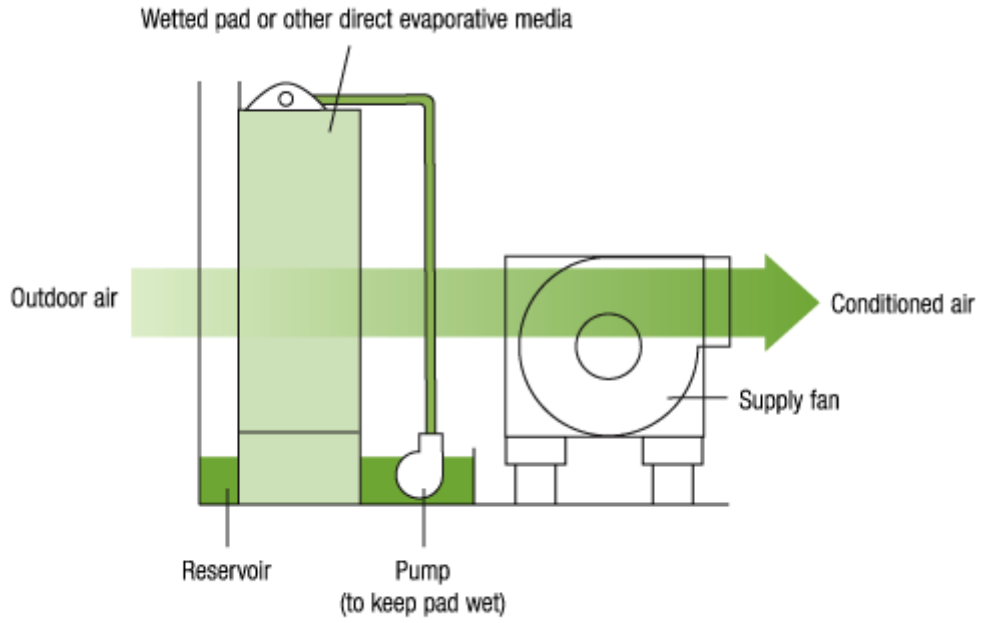

Source: *ASHRAE Journal*

Tuning up the DEC, while not a technically complicated process requiring special tools or training, does require patience and attention to detail. Completing the following tune-up procedures for both the water and air distribution systems will ensure peak system performance, produce the lowest possible supply air temperature for the existing conditions, save energy and water, and extend the life of the unit:

- *Confirm that the entire surface of the media is wetted.* Spray nozzles may need to be redirected to maximize the area of evaporation.
- *Verify that the pump operates properly and is the correct size.*
- *Confirm correct setting for the sump float valve.* A too-low position could starve the pump

and a too-high position could waste water by causing overflow into the drain.

- *Confirm that the bleed rate is set appropriately for the water hardness conditions.* The flow rate need only be sufficient to remove scale and contaminants. If the bleed rate is insufficient to remove scale caused by water that has high mineral content, install water treatment.
- *Verify that the daily media dry-out cycle is operational.* Allow the evaporative media to dry completely every 24 hours. Most biological organisms are easily killed or retarded by drying. When the system is shut down, allow the fan to operate long enough to completely dry out the media.
- *Check for leaks.* Duct leaks reduce the amount of conditioned air flowing to the space.
- *Inspect the relief air path.* Blockages can occur between the conditioned space and the exterior relief air openings, preventing free airflow and compromising cooling capacity.
- *Verify that relief air dampers are fully open when fan speed is on the highest setting.*
- *Inspect location of supply air intake.* Verify that any gas flues, plumbing, and exhaust fan vents are at least 10 feet away.

Perform summer startup procedures.

Summer startup occurs in the spring after all chance of freezing has passed. Completing the following summer startup procedures will prepare the DEC for the upcoming cooling season:

- *Clean the water reservoir.* Rinse with a solution of water and vinegar, using a soft brush as needed.
- *Inspect the water supply tubing for leaks.* Check the entire length and repair as necessary.
- *Check the water pump.* Clean any debris from the pump screen and verify that the impeller rotates freely.
- *Check the V-belt for deterioration and lubricate the blower wheel bearings.*
- *Check the motor and blower wheel for free rotation.*
- *Adjust dampers for the cooling season.* Confirm that the damper is open at the cooler and closed at the furnace.
- *Fill the sump and adjust the float valve.*
- *Control corrosion.* Use a bleed-off kit to flush out minerals or treat water with a

demineralizing agent.

- *Turn on the DEC and verify that all water and air distribution processes are functional.*
- *Confirm that exhaust air systems are working.*

Perform control system maintenance.

DEC controls range from simple fan and pump switches that are operated manually to complex building automation systems that sequence the DEC in combination with air-side economizers and vapor-compression cooling. DEC control system maintenance includes:

- *Check microprocessor-based thermostats.* Verify correct start/stop times and clock accuracy. Replace batteries annually.
- *Check building automation system controls.* Ensure that correct control sequences are activated, and verify sensor accuracy and position.

Perform periodic maintenance.

Periodic maintenance ensures that occupant comfort and energy efficiency are maintained throughout the cooling season. Completing the following maintenance procedures will also increase the useful life of the DEC equipment:

- *Replace the filters every two months or as needed.*
- *Clean the sump and water distribution system.* As water evaporates from the system, it leaves a residue of dirt, water treatment chemicals, and biological growth on the pads and in the sump. When these contaminants become concentrated, they can damage the pads and cause corrosion. Clean and flush quarterly during the cooling season to prolong the pads' useful life.

In addition to periodic maintenance, twice during the cooling season you should inspect:

- All water distribution components for blockages
- Sump water level—adjust the float valve if necessary

- Pad media for sags or holes
- Fan—clean out any debris and check for imbalanced conditions
- Fan shaft bearings—lubricate if necessary
- Fan belts—examine for fraying or slipping
- Ductwork for leaks

Perform winter shutdown procedures.

Winter shutdown occurs in the fall before the first frost. Completing these procedures will protect the DEC from freezing and prevent cold air intrusion into the conditioned space:

- Drain the sump, header, and internal piping.
- Shut off the indoor water valve, disconnect the water lines at the unit and drain them by gravity, and blow out any remaining water from the lines with compressed air.
- Clean and dry the tank and pump filter.
- Clean and dry the media.
- Install the unit's protective cover.
- Adjust dampers for heating season; confirm that the damper is closed at the cooler and open at the furnace.
- Disconnect electricity to the unit.
- Confirm that exhaust air systems are turned off and sealed up.

INDIRECT EVAPORATIVE COOLERS

Perform water and air distribution system maintenance.

Indirect evaporative coolers avoid humidifying air that enters conditioned space by using a heat exchanger (**Figure 4**). Building exhaust air flows through one side of the heat exchanger, where it is sprayed with water and cooled by evaporation. The building supply (fresh) air flows through the other side of the heat exchanger, where it is sensibly cooled by the evaporatively cooled secondary air. A different method uses a water-to-air heat exchanger, where water is evaporatively cooled using a cooling tower or some other type of direct evaporative cooling process (see the Water-Side Economizers section). The building supply air passes over the water-to-air heat exchanger through which the evaporatively cooled water circulates.

FIGURE 4: Indirect evaporative systems cool without adding humidity

Indirect systems extend the range and the savings of evaporative coolers to more humid climates and enable cooler airflow in dry climates.

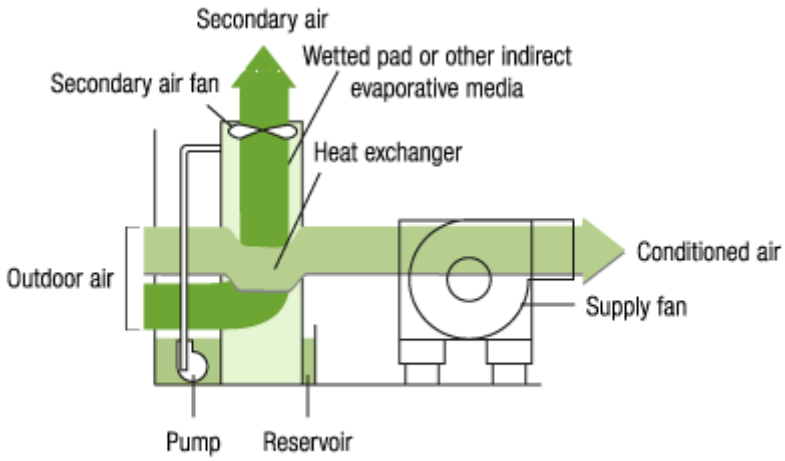

Source: *ASHRAE Journal*

Because an indirect system doesn't add moisture to the building supply air, poor maintenance is less likely to cause unhealthy conditions—but it can still compromise performance. Follow the same maintenance procedures for an indirect evaporative cooler that you would for a direct evaporative cooler. In addition, if bleed-off fails to prevent scaling on the pads or heat exchanger surfaces due to high mineral content in the water, water treatment similar to that used in a cooling tower may be required. Some manufacturers offer units with polymeric heat exchangers that resist scale buildup and corrosion.

DESICCANT DEHUMIDIFICATION

Perform desiccant system maintenance.

Desiccants—materials that readily attract water and thus dehumidify air—have traditionally

been limited to applications in humid climates or to those that require tight control over humidity levels, such as hospitals, museums, and supermarkets. Newer hybrid systems now incorporate desiccant cooling into packaged rooftop units to offer an alternative way to condition buildings that have high humidity loads.

Increased humidity levels are often an unintended consequence of improved building energy efficiency. For example, efficiency measures such as lighting retrofits save electricity but also reduce the amount of sensible heat generated in a space; this reduction in sensible cooling load can lead to increased indoor humidity during the cooling season. This condition can be exacerbated when local building codes adopt higher building ventilation rate standards that can introduce even larger amounts of humid outside air.

Rotating honeycomb wheels are the most popular dehumidifier design for space cooling applications. Solid desiccant is impregnated into a wheel structure that has removable sections to facilitate cleaning and replacement. As the wheel rotates, the desiccant alternately passes through two separate airstreams: one to be dehumidified and used in the building; and one to regenerate the desiccant with warm, dry exhaust air (**Figure 5**).

FIGURE 5: Desiccant wheels reduce latent cooling loads by capturing water vapor from the outside air stream

Older desiccant materials were regenerated by heating the exhaust air. New desiccant materials can be regenerated by the return air, saving energy by eliminating the need for a regenerative burner.

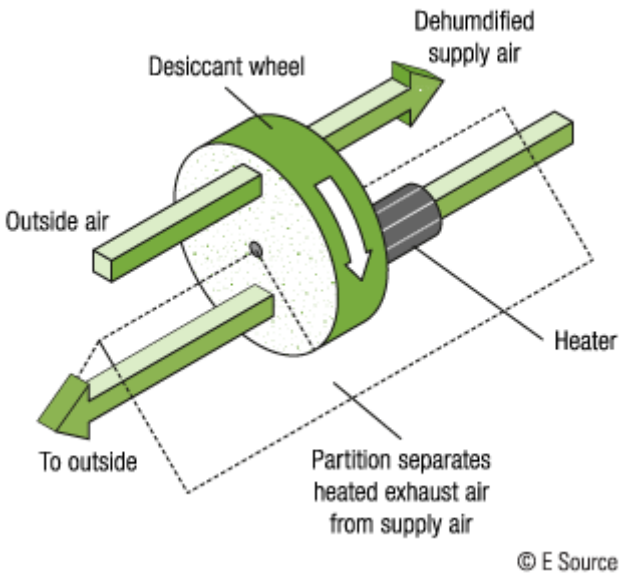

Manufacturers including Lennox, Trane, and Munters suggest the following annual maintenance procedures for desiccant systems:

- *Verify correct airflow balance across the wheel.* This procedure should be performed by a technician certified by the manufacturer.
- *Remove and clean the wheel sections.* Follow the manufacturer's recommendations.
- *Visually inspect the wheel.* Replace if surface deterioration is present or if the unit serves a smoking area.

In addition, you should perform the following inspections and replacements about every three months:

- Check wheel for free rotation and imbalanced conditions.
- Change filters located before and after the wheel.
- Check belts for fraying and proper tension.

Retrofits

AIR-SIDE ECONOMIZERS

Upgrade to premium economizer specifications.

In response to widespread performance problems with standard economizers, the Eugene Water and Electric Board (EWEB) developed a set of equipment and installation requirements—called Western Premium Economizer—that can increase the reliability of and savings achieved from conventional economizers. These requirements are designed to reduce the likelihood that economizers will operate improperly due to failures of dampers, sensors, and controls. Three of the main recommendations include:

- *Integrate economizer and compressor operation.* Traditional economizer control uses a single temperature setpoint to shut down the economizer when it can no longer meet the cooling load. Integrated control uses a two-stage thermostat that turns on the compressor to supplement the economizer cooling, modulates the economizer dampers to reduce the

outside air intake, and prevents overcooling of the supply air. With multiple-stage or variable-speed compressor rooftop units and chilled-water systems, the mechanical portion of the cooling can be modulated down to varying degrees, allowing for even more economizer cooling and greater savings.

- *Use sensors appropriate to the climate.* In locations that have high humidity, such as the Northeast, Midwest, and, particularly, the Southeast, enthalpy sensors are typically needed—which account for both the dry-air temperature and the moisture contained in the air. However, enthalpy sensors need frequent calibration, have shorter lives, and are more expensive than drybulb sensors (which measure the dry-air temperature without accounting for the moisture in the air). In dryer climates, such as west of the Texas panhandle, drybulb sensors are recommended to avoid the reliability issues of enthalpy sensors.
- *Enable differential/comparative changeover with multiple sensors.* Most economizer controllers can maximize savings by using outside air until it is warmer (or has greater enthalpy) than the return air. This comparative control requires you to install a return-air sensor. Control via the outside-air sensor alone requires establishing a fixed changeover setpoint. The single-sensor approach misses some opportunity for savings by ignoring indoor conditions, and the setpoint is often set incorrectly in the field, leading to energy waste.

In addition to preventing economizer failure, the “premium” measures can also double the energy savings compared to properly operating standard economizers.

Retrofit the economizer sensor.

In 2008, the New Buildings Institute, a nonprofit organization that promotes commercial building energy efficiency, revealed one contributing factor to widespread economizer underperformance—as well as a simple fix. A widely used sensor, the C7650 from Honeywell, was found to not activate economizers until the outside air temperature had dropped significantly below the activation setpoint. This resulted in reduced economizer operation and lost savings. However, Honeywell has released a new, more accurate sensor—the C7660A—to replace the old one. Further research indicates that switching to the more accurate sensor could decrease annual cooling energy use by 8 percent.

Install stainless steel dampers.

In areas where corrosion can cause dampers to stick or freeze, consider upgrading to stainless steel dampers. These resist corrosion much better than the galvanized steel or

aluminum dampers typically used in economizers. Because stainless steel dampers cost about twice as much as galvanized dampers, the extra cost is probably not justified if a building is far from sources of marine or industrial corrosion.

Install direct-drive actuators.

Typically, the actuator (which provides the force to move the damper) is connected to the damper by a series of metal linkages. Over time, these linkages can corrode, weaken, or loosen—seriously impairing their ability to transfer torque from the actuator to the damper. To improve the mechanical control of dampers and to avoid linkage failure, replace linkages with direct-drive actuators. These have fewer moving parts between the actuator and the damper, so there are fewer parts that can fail.

DIRECT EVAPORATIVE COOLERS

Upgrade to variable-speed fans.

Conventional evaporative coolers control capacity, or cooling output, by cycling either the cooler circulating pumps or the cooler fans. This method of capacity control is inefficient compared to other methods such as using variable-speed fan controls to reduce fan energy at partial loads. Pacific Gas and Electric—through its ACT2 pilot retrofit project—demonstrated fan energy savings of 30 to 80 percent from installing variable-speed fan controls, depending on building load profile. This upgrade also increases comfort by eliminating the large supply-air temperature swings common in systems relying on traditional capacity control methods.

Add an indirect evaporative cooler to an existing direct evaporative cooler.

Commercial-scale direct evaporative coolers typically feature an effectiveness of 85 percent, which means that the drybulb temperature of the incoming air is reduced by 85 percent of the difference between the air's drybulb and wetbulb temperatures. Installing an indirect evaporative cooler on an existing direct evaporative cooler can improve its effectiveness while limiting the humidity added to the supply air. The supply air is evaporatively cooled, first indirectly and then directly.

Typical indirect/direct evaporative coolers have a rated effectiveness of 120 to 130 percent, as they are capable of cooling supply air below its initial wetbulb temperature. According to a report presented at the Clima 2000 World Congress on Heating, Ventilating & Air Conditioning, indirect/direct evaporative coolers can reduce cooling energy requirements for small commercial buildings in the U.S. by between 9 percent (Gulf Coast applications) and 54 percent (Pacific Northwest applications); and they can reduce peak electrical demand in all

regions of the U.S. by 11 to 16 percent.

WATER-SIDE ECONOMIZERS

Install water-side economizers to produce chilled water when weather conditions permit.

Water-side economizers isolate the cooling tower from the chiller circuit and use the tower to evaporatively cool the water supplying the chilled-water circuit. The most common type is an indirect economizer that uses a separate heat exchanger, typically of the plate-and-frame type. It allows for a total bypass of the chiller, transferring heat directly from the chilled-water circuit to the condenser-water loop. When the wetbulb temperature is low enough, the chiller can be shut off and the cooling load may be served exclusively by the cooling tower. Plate-and-frame heat exchangers are typically sized for about 50 percent of the load, according to Greg Bradshaw, an HVAC controls system designer. However, sizing them for up to 100 percent of the load can extend their operating temperature range by 8° to 10° Fahrenheit in some climates for just the added cost of additional plates (**Figure 6**).

FIGURE 6: A water-side economizer requires pumping energy only to deliver cool water from the cooling tower to the cooling coil

Inserting a plate-and-frame heat exchanger between the cooling tower and air-handling unit's cooling coil enables the controls to bypass the chiller when outdoor temperatures are low enough.

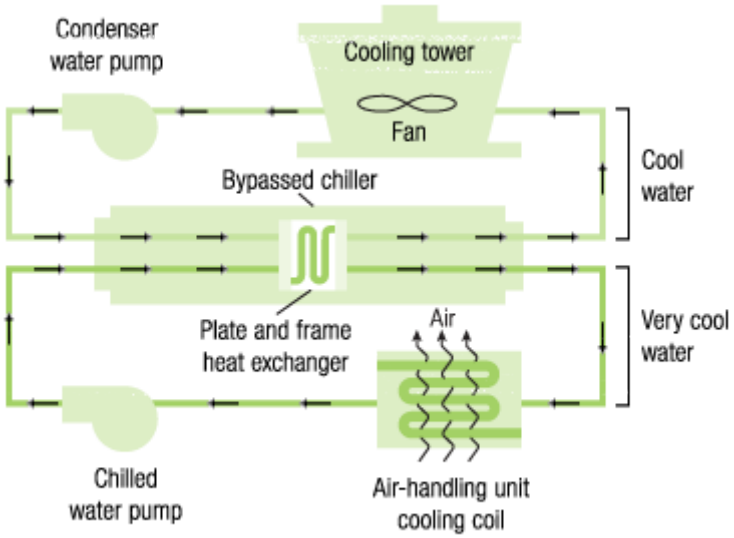

© E Source; adapted from U.S. Environmental Protection Agency

DESICCANT DEHUMIDIFICATION

Install an active desiccant module (ADM) downstream of the evaporator coil on a packaged air conditioner.

In systems with ADMs, the desiccant wheel is positioned downstream of the packaged system's evaporator coil and the wheel is sized to handle about 33 to 45 percent of the supply outside airflow. Bypass dampers modulate the flow through the desiccant wheel and allow the wheel to be completely bypassed under heating conditions. A direct-fired burner and fan are most often used to regenerate the wheel, but hot water or steam coils can be used instead to make efficient use of waste heat. An ADM–rooftop unit combination can cut the mechanical cooling capacity in half compared to a conventional packaged system, reducing electric demand and electricity consumption (**Table 1**).

Table 1: Active desiccant module energy savings

An Oak Ridge National Laboratory study found that desiccant dehumidification can cut mechanical cooling energy use by 50 percent.

System parameter	ADM/rooftop unit combination	Expansion rooftop unit (overcool and reheat)
Cooling capacity required (tons)	5	10
Reheating energy required (Btu/hour)	0	32,400
Regeneration energy required (Btu/hour)	33,500	—
Supply dewpoint used for analysis (Fahrenheit)	56	56
Annual cooling energy cost ($)	1,360	2,480
Unit size (height x width x length in inches)	31.0 x 46.0 x 46.0	33.5 x 46.5 x 83.0

Note: Assumes the system processes 1,500 cubic feet per minute of outside air at cooling design conditions of 85° Fahrenheit (F) drybulb temperature, 71° to 56°F supply dewpoint, 68°F air delivered to the conditioned space, and utility costs of $0.07/kilowatt-hour for electricity and $4.50/million Btu for natural gas.

© E Source; data from Oak Ridge National Laboratory

ADMs also reduce compressor cycling because they allow you to use a smaller rooftop unit that operates near full-load conditions much more frequently. Regeneration energy consumption is almost offset by the avoided reheat energy consumption, and the annual operating costs of an ADM system are 45 percent less than those of a packaged rooftop unit without an ADM.

All content copyright © 1986-2017 E Source Companies LLC. All rights reserved.

Source URL: https://tva.bizenergyadvisor.com/members/CEMC-OMCK-5x-BEA/OM-Checklist/Nonrefrigerative-Cooling-Systems